1

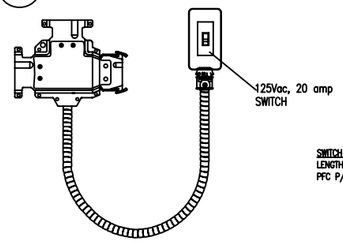

SWITCH DROP
LENGTHS: 9'
PFC P/N: ELQMOOOSD-9G
ELQMOOOSD-9G-T2
ELQMOOOSD-9I
ELQMOOOSD-9I-T2

2

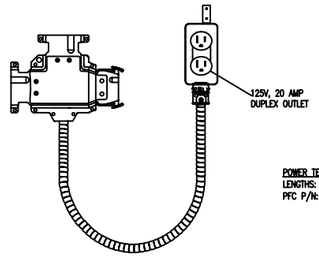

POWER TEE
LENGTHS: 9'
PFC P/N: ELQMOOOPT-9G
ELQMOOOPT-9G-T2
ELQMOOOPT-9I
ELQMOOOPT-9I-T2

3

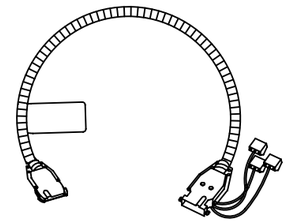

FIXTURE CABLE
LENGTHS: 9' AND 15'
PFC P/N: ELQMOOOFC9
ELQMOOOFC15

4

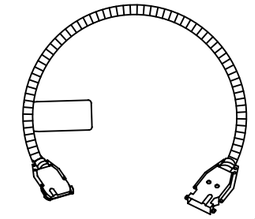

EXTENDER CABLE
LENGTHS: 9' AND 21'
PFC P/N: ELQMOOOE-09
ELQMOOOE-21

5

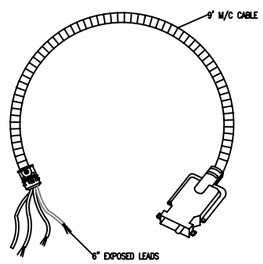

CONVERTER CABLE
LENGTHS: 9'
PFC P/N: ELQMOOOC-6

6

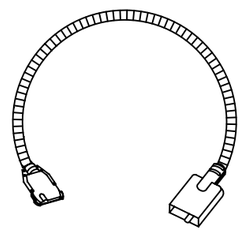

240V EXTENDER CABLE
LENGTHS: 11'

7

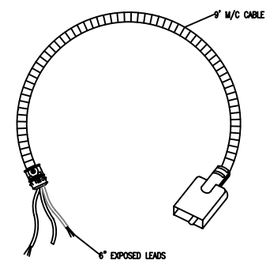

240V CONVERTER CABLE
LENGTHS: 9'
PFC P/N: ELQMOOCD240-6

8

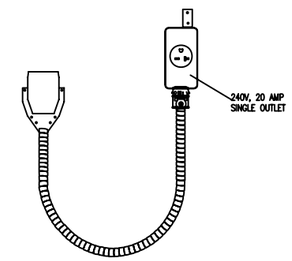

240V SINGLE OUTLET
LENGTH: 21'
PFC P/N: ELQMOOOC240-21G

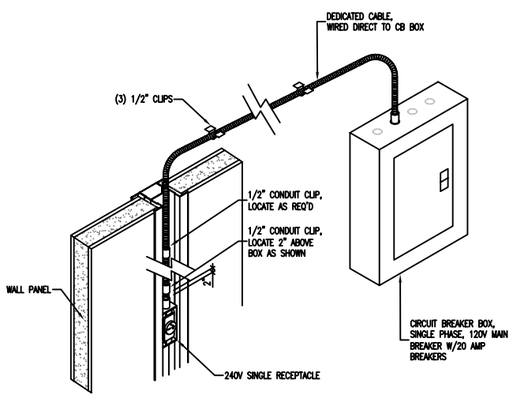

A/2 240V DEDICATED RECEPTACLE

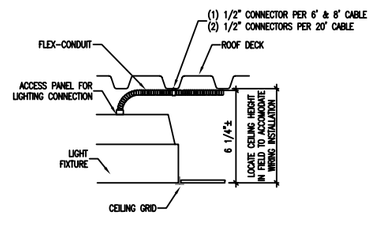

LIGHT FIXTURE AND DECKING DETAIL

- DIMENSIONS SHOWN INCORPORATE PORTA-FAB STANDARD 2x4 TROFFER LIGHT FIXTURE. HEIGHT MAY DIFFER BY FIXTURE TYPE.
- CEILING HEIGHT MAY ALSO REQUIRE ADJUSTMENTS FOR EXHAUST FANS, DUCT WORK OR OTHER MECHANICAL.

B/2 MODULAR LIGHTING

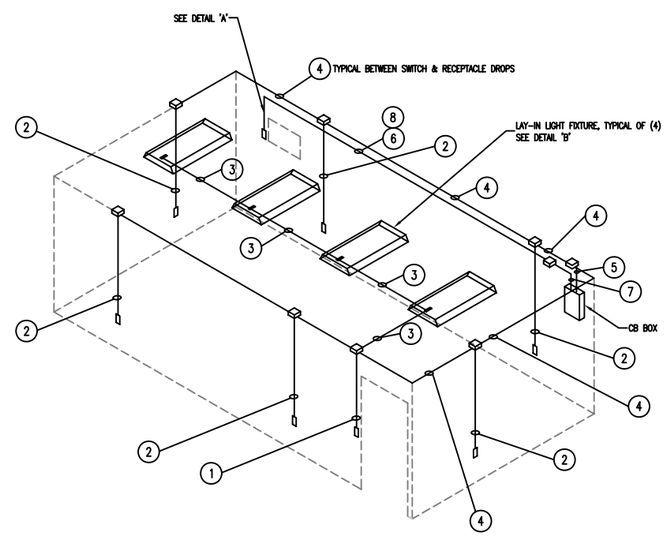

2 TYPICAL MODULAR LAYOUT

FOR REFERENCE ONLY. REFER TO MODULAR WIRING LAYOUT FOR ACTUAL LOCATIONS AND CALL OUTS FOR MODULAR COMPONENTS.

MODULAR WIRING INSTALLATION INSTRUCTIONS:

1) INSTALL OFFICE WALLS, DUST COVER AND CEILING GRID PER PORTA-FAB INSTALLATION INSTRUCTIONS. DO NOT INSTALL CEILING TILES (AND WIRING STUD COVERS ON DESIGNATED WIRING STUDS) UNTIL MODULAR WIRING IS COMPLETE.

2) THE LOAD CENTER TO BE A SINGLE PHASE, 240V/120V MAIN BREAKER. INCLUDES 20 AMP BREAKERS.

3) MOUNT THE LOAD CENTER WHERE SHOWN ON THE PLANS. POWER SHOULD NOT BE ESTABLISHED UNTIL ALL WIRING IS COMPLETE.

4) WIRE THE CONVERTER CABLE TO THE LOAD CENTER AND START THE MODULAR WIRING LOOP AS OUTLINED ON THE PLANS.

5) INSTALL THE OUTLETS AND SWITCH ASSEMBLIES PER THE PLAN INTO THE STUD HAT SECTIONS. IT IS IMPORTANT THAT THE CORRECT DESIGNATION DROPS AT THE TOP OF THE OUTLET AND SWITCH ASSEMBLIES ARE INSTALLED AS SHOWN ON THE PLANS.

6) SEVERAL CABLE SETS ARE SUPPLIED IN MULTIPLE LENGTHS, THEREFORE, FOLLOW THE SUPPLIED DRAWINGS AS TO ESTABLISH EACH CABLE SET LOCATION.

7) CLIPS ARE PROVIDED TO SECURE THE CABLE SETS WITHIN THE STUD HATS. CABLES ARE REQUIRED TO BE SECURED AND SUPPORTED EVERY 6 FEET AND WITHIN 12" OF EACH DEVICE AND TERMINATION (EXCLUDING LIGHT FIXTURES).

8) INSTALL THE CEILING PER CEILING INSTRUCTIONS AND INSTALL STUD COVERS PER PORTA-FAB INSTRUCTIONS.

GENERAL NOTES:

1) THIS DRAWING IS INTENDED TO SERVE AS AN INSTALLATION GUIDE FOR A MODULAR WIRING SYSTEM AND IS BEING PROVIDED FOR REFERENCE ONLY. IT IS NOT INTENDED TO REPLACE CONTRACT ELECTRICAL DRAWINGS.

2) PORTA-FAB MAKES NO REPRESENTATION THAT THE SUPPLIED DRAWINGS OR MATERIALS MEET LOCAL ELECTRICAL CODES. PURCHASER SHOULD VERIFY CONFORMITY WITH LOCAL CODES.

3) LICENSED ELECTRICIAN IS REQUIRED FOR MAIN POWER CONNECTION. DISTRIBUTOR IS RESPONSIBLE FOR COMPLIANCE WITH LOCAL CODES.

4) INSTALL IN ACCORDANCE WITH THE NATIONAL ELECTRIC CODE AND APPLICABLE CODES AND ORDINANCES. CONFIRM PRIOR TO INSTALLATION TO ASSURE COMPLIANCE.

REV.	DESCRIPTION	DATE

PORTAFAB CORPORATION
18000 CHESTERFIELD AIRPORT ROAD, CHESTERFIELD, MO 63005
email: engineering@portafab.com (800) 325-3781

These documents were developed by PORTA-FAB Corporation. The contents of these documents are the property of Porta-Fab corporation. They are not to be used, copied or used without the express written permission of PORTA-FAB Corporation.

PORTAFAB CORPORATION
MODULAR ELEC. STANDARD DETAILS
P.O. -

-
PANEL HEIGHT: -

DRAWN BY: SLC	DATE:
CHECKED BY:	SHIP DATE:
SCALE: N/A	REVISED:
ORDER NO.	
SHEET NO. 1 OF 1	

SUPPLIER MAKES NO REPRESENTATION THAT THE BUILDING OR COMPONENT DEPICTED HEREIN COMPLIES WITH APPLICABLE CODE OR ORDINANCES; PURCHASER SHOULD VERIFY COMPLIANCE WITH SUCH CODES AND ORDINANCES.